PRODUCT NEWS

Product Discontinuation Notices

August 1, 2011

Ultrasonic Sensors

No. 2011264E

Discontinuation Notice of Ultrasonic Sensor E4A special specification model, E4B special specification model, E4C series and Ultrasonic Displacement Sensor E4DA series

Product Discontinuation	Recommended Replacement
Ultrasonic Sensor	
E4A-3K-02A	**No recommended replacement**
E4B Series	**E4B Series (cable length:2M)**
E4C Series	**E4E2 Series**
Ultrasonic Displacement Sensor	
E4DA Series	**E4PA-LS50-M1-N**

Discontinuation date : The end of March, 2012

OMRON Corporation
Industrial Automation Company

Caution on recommended replacement

E4A-3K-02A
No recommended replacement products.

E4B Series
The difference point of Product Discontinuation models and recommended replacement is only the cable lengths.

E4C Series
- The composition of the sensor is changed from separable amplifier type to built-in amplifier type.
- The shape of the sensor is changed from cylindrical shape (M18) to the hexahedron.
- The response frequency is changed from 50Hz to 20Hz.
- The power-supply voltage is changed from 12 to 24VDC ± 10% to 24VDC(21.6 to 26.4VDC).
- The control output is changed from NPN or PNP output to the NPN output.
- The control output of the connector output is lost.
- The operational mode is changed from normally open or normally closed (selectable with a slide switch) to no-incident ON.
- The synchronous function is lost.
- The Degree of protection of the sensor is changed from IP66 to IP64.

E4DA Series
- The composition of the sensor is changed from separable amplifier type to built-in amplifier type.
- The shape of the sensor is changed from the hexahedron to cylindrical shape (M30).
- The Dead band distance is changed from 30 to 70 mm to 50 to 500 mm.
- The judgment output and alarm output is lost.
- The Degree of protection of the sensor is changed from IP66 to IP65.

Difference from discontinued product

E4A-3K-02A

Model	Body Color	Dimen sions	Wire connection	Mounting Dimensions	Charact eristics	Operation ratings	Operation methods
No recommended replacement	-	-	-	-	-	-	-

E4B Series

Model	Body Color	Dimen sions	Wire connection	Mounting Dimensions	Charact eristics	Operation ratings	Operation methods
E4B Series	**	*	*	**	**	**	**

E4C Series

Model	Body Color	Dimen sions	Wire connection	Mounting Dimensions	Charact eristics	Operation ratings	Operation methods
E4E2 Series	--	--	--	--	*	*	*

E4DA Series

Model	Body Color	Dimen sions	Wire connection	Mounting Dimensions	Charact eristics	Operation ratings	Operation methods
E4PA-LS50-M1-N	--	--	--	--	--	--	--

** : Fully compatible
* : The change is a little/Almost compatible
-- : Not compatible
- : No corresponding specification

Product Discontinuation and recommended replacement

	Product discontinuation	Recommended replacement
E4A-3K-02A	E4A-3K-02A AC220	No recommended replacement
E4B Series	E4B-LS70E4 5M	E4B-LS70E4 2M
	E4B-LS70E4 10M	E4B-LS70E4 2M
	E4B-RS70E4 5M	E4B-RS70E4 2M
	E4B-LS20E4 5M	E4B-LS20E4 2M
	E4B-T1F4 5M	E4B-T1F4 2M
	E4B-TS50SF4 5M	E4B-TS50SF4 2M
	E4B-TS50RF4 5M	E4B-TS50RF4 2M
E4C Series	E4C-TS50 2M	E4TS50C1 2M
	E4C-TS50R 2M	E4TS50C1 2M
	E4C-WH4T DC12/24	E4TS50C1 2M
	E4C-LS35 2M	No recommended replacement
	E4C-LS35 5M	No recommended replacement
	E4C-WH4L DC12/24	No recommended replacement
	E99-C	No recommended replacement
E4DA Series	E4DA-LS7	E4PA-LS50-M1-N
	E4DA-WL1C DC12/24	E4PA-LS50-M1-N
	E49-DD5	No recommended replacement

E4A-3K-02A

No recommended replacement

E4B Series

The difference point of Product Discontinuation models and recommended replacement is only the cable lengths.

E4C Series

Body color

Product discontinuation E4C-TS50 / TS50R / E4C-WH4T	Recommended replacement E4E2-TS50C1
Light gray	Black

Dimensions

Product discontinuation
E4C-TS50 / TS50R / E4C-WH4T

Sensors

E4C-TS50 / TS50R

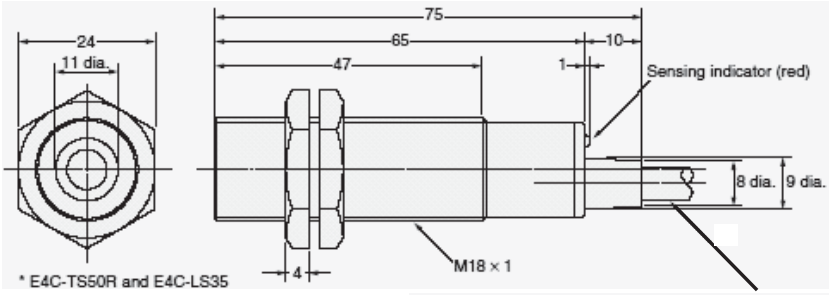

6-dia. vinyl-insulated round cable with 2 conductors
(conductor cross section: 0.3 mm², insulator diameter: 1.18 mm dia.),
Standard length: 2 m

Amplifier Unit

E4C-WH4T

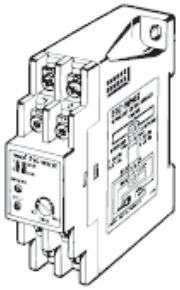

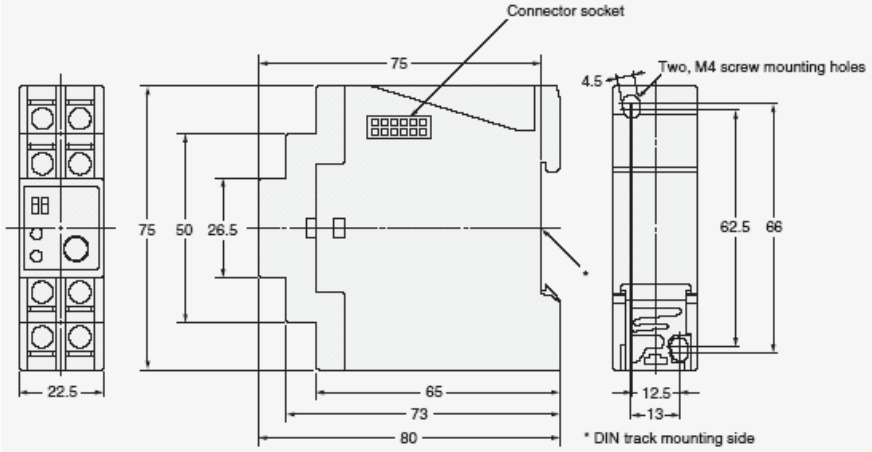

Dimensions

Recommended replacement
E4E2-TS50C1

Emitter
E4E2-TS50TC1

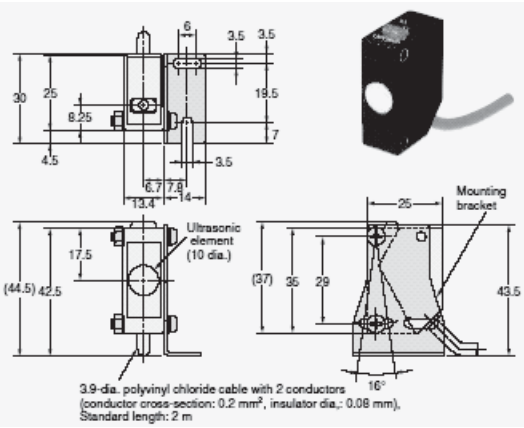

Receiver
E4E2-TS50RC1

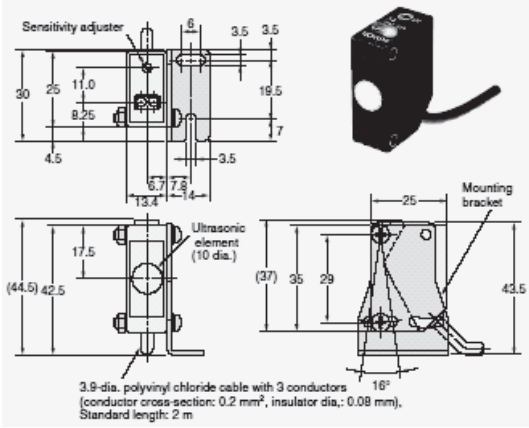

Wire Connection

Product discontinuation E4C-TS50 / TS50R / E4C-WH4T	Recommended replacement E4E2-TS50C1
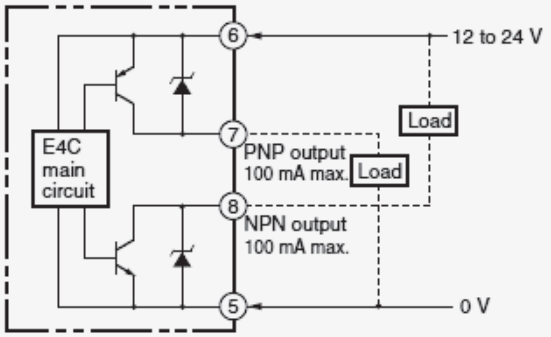	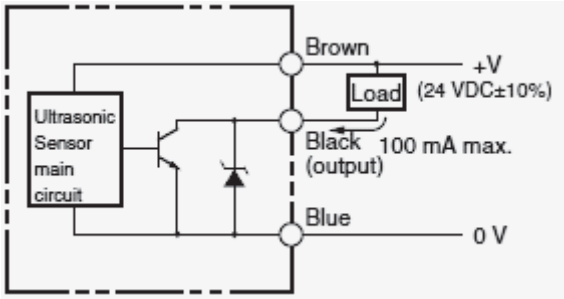
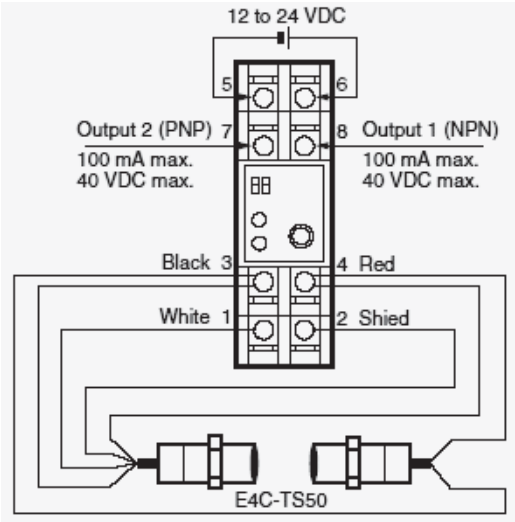	

Mounting dimensions

Product discontinuation E4C-TS50 / TS50R / E4C-WH4T	Recommended replacement E4E2-TS50C1
Sensors E4C-TS50 / TS50R 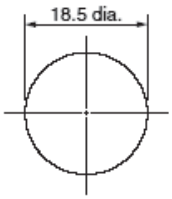 **Amplifier Unit** E4C-WH4T 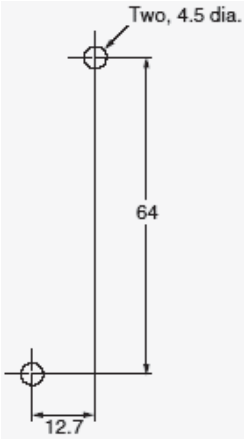 	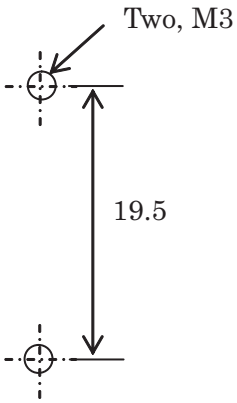

Characteristics

Item	**Product discontinuation E4C-TS50 / TS50R / E4C-WH4T**	**Recommended replacement E4E2-TS50C1**
Sensing method	Through-beam	
Sensing distance	500 mm	
Standard sensing object	100 × 100 mm flat plate	40 × 40 × 2 mm SPCC plate
Ultrasonic oscillation frequency	Approx. 270 kHz	Approx. 360 kHz
Response frequency	50 Hz max.	20 Hz max.
Power supply voltage	12 to 24 VDC ±10% with a max. ripple ±10% (p-p)	24 VDC (21.6 to 26.4 V) with a max. ripple (p-p) 10%
Current consumption	100 mA max. at 12 VDC	Emitter: 25 mA max. at 24 VDC Receiver: 15 mA max. at 24 VDC
Control output	Terminal output: 100 mA max. (NPN or PNP open-collector output at 40 VDC with a residual voltage of 2 V) Connector output: 50 mA max. (photo coupler output)	NPN open collector, Load voltage: 26.4 V DC max., Load current: 100 mA max. (Residual voltage: 1 V max.)
Indicator	Sensors ; SENSING indicator (red LED) Amplifier Units ; Sensing indicator (red LED) and Stability indicator (green LED)	Emitter: Power indicator (red) Receiver: Operation indicator (red), Stability indicator (green)
Operating mode	Normally open or normally closed (selectable with a slide switch)	No-incident ON
Synchronous function	A maximum of four Sensors can be in synchronous operation.	None
Ambient temperature	Operating: 0 to 50°C, Storage: -10 to +55°C (with no icing or condensation)	Operating: 0 to 50°C, Storage: -10 to +55°C (with no icing or condensation)
Ambient humidity	Operating and storage: 35% to 95% (with no condensation)	Operating and storage: 35% to 85% (with no condensation)
Insulation resistance	20 MΩ min. (at 500 VDC) between current-carrying parts and case	100 MΩ min. (at 500 VDC) between current-carrying parts and case
Dielectric strength	1,000 VAC (50/60 Hz) for 1 min between current-carrying parts and case	1,500 VAC (50/60 Hz) for 1 min between current-carrying parts and case
Vibration resistance	Destruction: 10 to 55 Hz, 1.5-mm double amplitude for 2 hours each in X, Y, and Z directions	
Shock resistance	Destruction: 500 m/s^2 three times each in X, Y, and Z directions	
Degree of protection	Sensors ; IP66 (IEC) Amplifier Units ; IP40 (IEC)	IP64 (IEC)
Connection method	Terminal block	Pre-wired (Standard cable length: 2 m)
Materials	Sensors ; Case: ABS resin, Amplifier Units ; Case: ABS resin,	Case: ABS resin, Oscillator surface: Epoxy resin
Accessories	Sensors ; Instruction manual Amplifier Units ; Instruction manual	Mounting Bracket (with screws), adjustment screwdriver, instruction sheet

Operation ratings

Product discontinuation E4C-TS50 / TS50R / E4C-WH4T	Recommended replacement E4E2-TS50C1
Parallel Movement 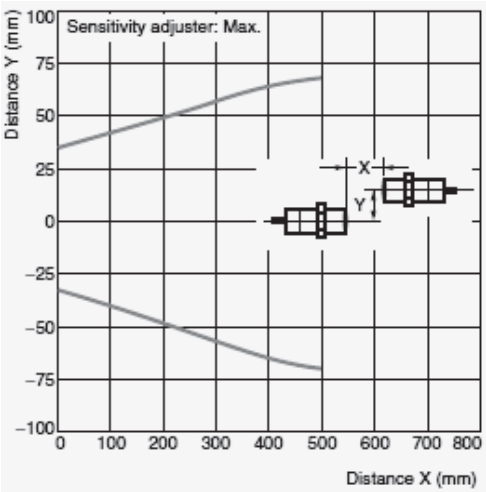 	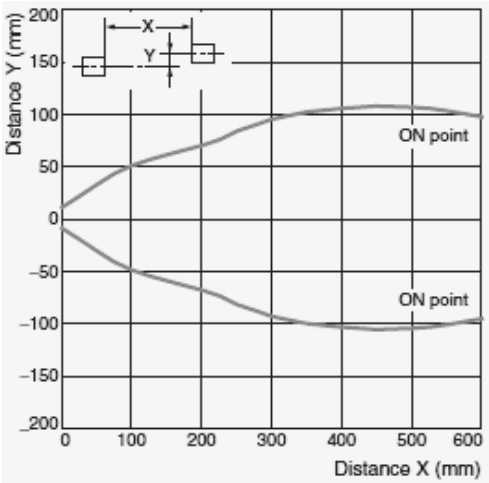
Sensing Distance and Sensing Object Size 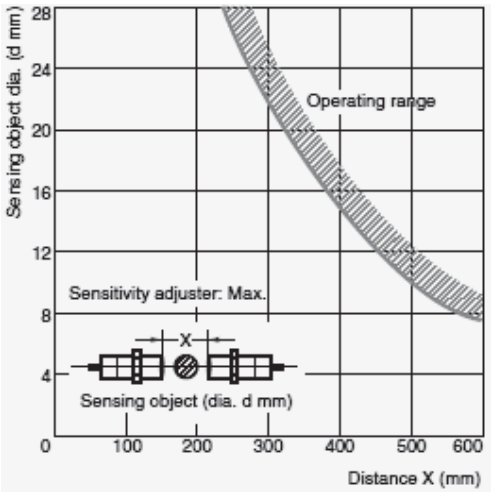 	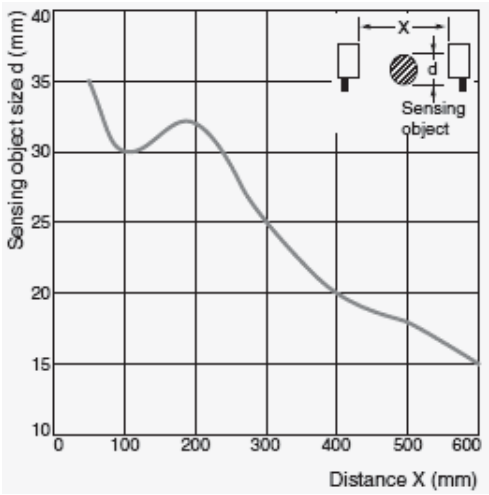

Operation methods

Product discontinuation E4C-TS50 / TS50R / E4C-WH4T	Recommended replacement E4E2-TS50C1
Sensitivity adjustment turn adjustor	**Sensitivity adjustment** turn adjustor

E4DA Series

Body color

Product discontinuation E4DA-LS7 / E4DA-WL1C	Recommended replacement E4PA-LS50-M1-N
Sensors : Black Amplifier Unit : Light gray	Argent

Dimensions

Product discontinuation E4DA-LS7 / E4DA-WL1C
Sensor E4DA-LS7    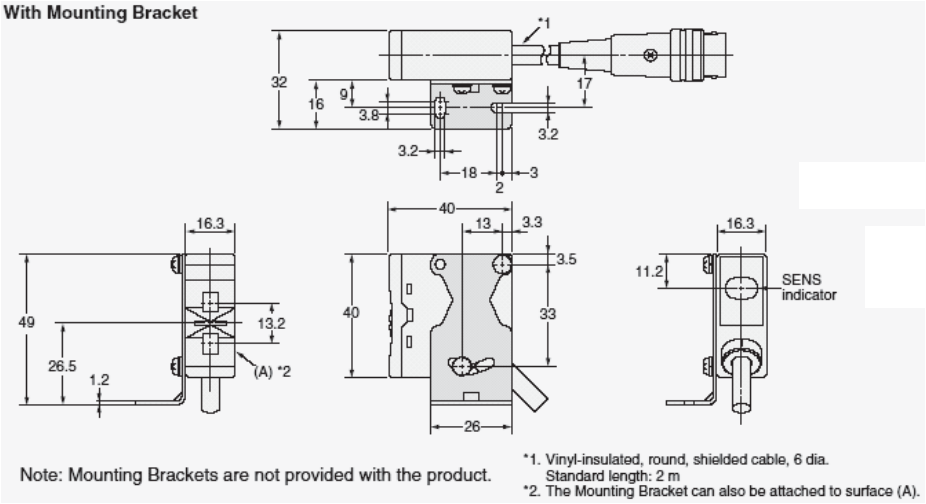

Dimensions

Product discontinuation
E4DA-LS7 / E4DA-WL1C

Amplifier Unit

E4DA-WL1C

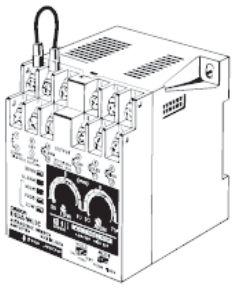

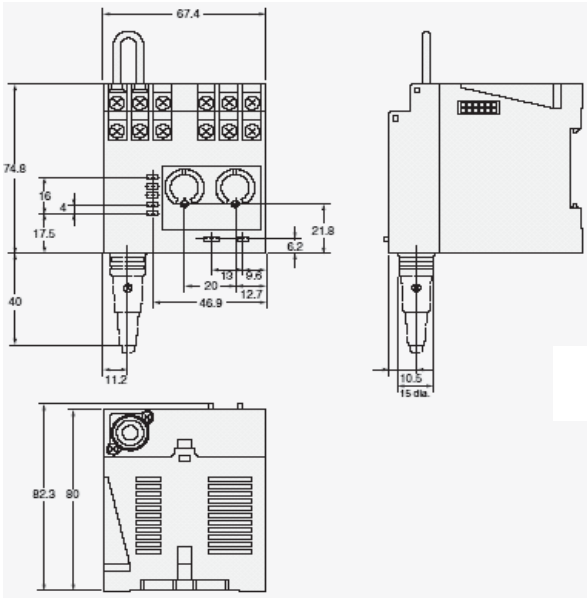

Extension Cable

E49-DD5

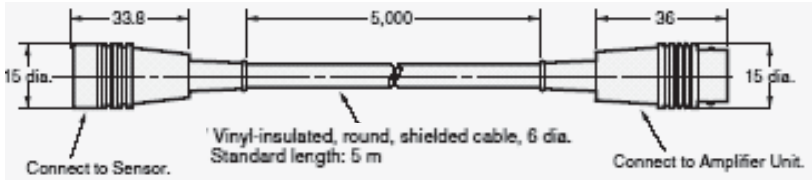

Recommended replacement
E4PA-LS50-M1-N

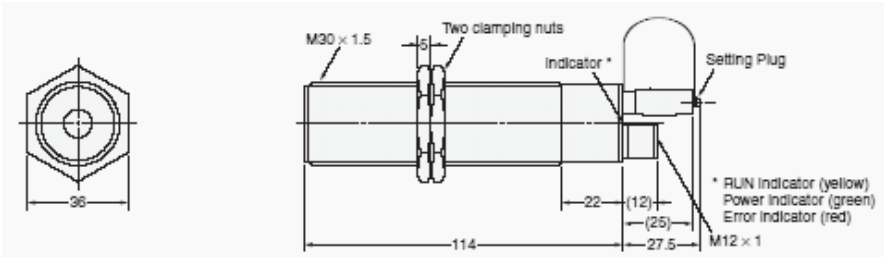

Wire Connection

Product discontinuation E4DA-LS7 / E4DA-WL1C	Recommended replacement E4PA-LS50-M1-N
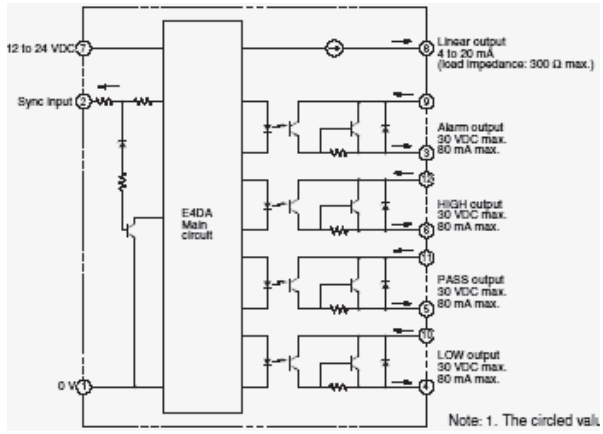 Note: 1. The circled values indicate terminal pins. 2. The GND terminal for linear output is terminal (1). Connect the linear output GND (0 V) terminal to the input device.	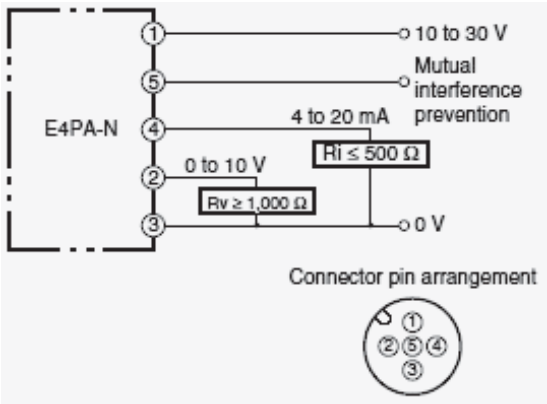

Mounting dimensions

Product discontinuation E4DA-LS7 / E4DA-WL1C	Recommended replacement E4PA-LS50-M1-N
Sensors E4DA-LS7 Mounting Hole Dimensions 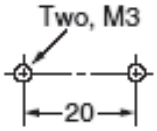 **Amplifier Unit** E4DA-WL1C Mounting Hole Dimensions 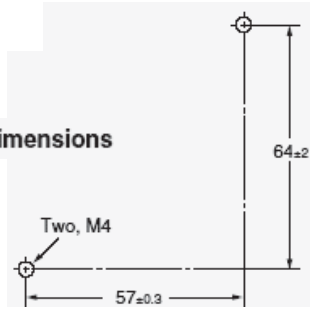	Mounting Hole Dimensions 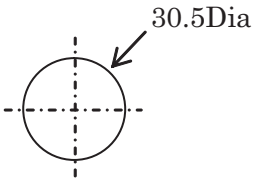

Characteristics

Item		Product discontinuation E4DA-LS7 / E4DA-WL1C	Recommended replacement E4PA-LS50-M1-N
Sensing distance		30 to 70 mm	50 to 500 mm
Standard sensing object		40 mm × 40 mm flat plate	100 × 100 mm flat plate
Response time		2 ms	63 ms max.
Power supply voltage		12 to 24 VDC ±10% ripple (p-p) 10% max.	10 to 30 VDC; ripple (p-p): 10% max.
Current consumption / Power consumption		200 mA max.	1,800 mW max.
Output	Analog output	Current output: 4 to 20mA (allowable load resistance: 0 to 300 Ω)	Current output: 4 to 20 mA (Allowable load resistance: 500 Ω max.) Voltage output: 0 to 10 V (1,000 Ω min.)
	Judgment output	Three photo coupler outputs (HIGH, PASS, LOW), 80 mA at 30 VDC max. , Residual voltage: 1 V max.	None
	Alarm output	Photo coupler output, 80 mA at 30 VDC max., Residual voltage: 1 V max.	None
Synchronous input		ON: 0 to 1 V, 1 mA min. OFF; Open between terminals or 4 to 24 V, 15 mA max. Response time: 1 ms max.	None
Linearity		±1% FS max.	
Resolution		0.2 mm	-
Repeat accuracy		-	0.1% FS max.
Function		Hold, Timer	Mutual Interference Prevention
Temperature influence		±4% FS max. for output value at 23°C in ambient range of -10 to 55°C	±1% FS of output value at +23°C in the temperature range of -10 to 55°C
Voltage influence		±2% FS max. for rated power supply voltage range ±10%	±0.5% FS max. within rated power supply voltage range
Ambient temperature		Operating: -10 to +55°C, Storage: -25 to +65°C (with no icing or condensation)	Operating: -10 to +50°C, Storage: -40 to +85°C (with no icing or condensation)
Ambient humidity		Operating and storage: 35% to 85% (with no condensation)	
Insulation resistance		20 MΩ min. (at 500 VDC) between current-carrying parts and case	50 MΩ min. (at 500 VDC) between current-carrying parts and case
Dielectric strength		AC1,000V 50/60Hz 1min between the charged parts and case	
Vibration resistance		Sensors Destruction: 10 to 55 Hz, 1.5-mm double amplitude or 55 to 500 Hz, 100m/s^2 for 33 min each in X, Y, and Z directions Amplifier Unit Destruction: 10 to 55 Hz, 1-mm double amplitude or 55 to 150 Hz, 70m/s^2 for 32 min each in X, Y, and Z directions	Destruction: 10 to 55 Hz, 1-mm double amplitude for 2 hours each in X, Y, and Z directions
Shock resistance		Sensors Destruction: 500m/s^2 3 times each in X, Y, and Z directions Amplifier Unit Destruction: 300m/s^2 3 times each in X, Y, and Z directions	Destruction: 300 m/s^2 three times each in X, Y, and Z directions

Characteristics

Item	Product discontinuation E4DA-LS7 / E4DA-WL1C	Recommended replacement E4PA-LS50-M1-N
Degree of protection	Sensors ; IP66 (IEC) Amplifier Units ; IP30 (IEC)	IP65 (IEC 60529)
Connection method	Sensors ; Pre-wired with connector (standard cable length: 2m) Amplifier Units ; Terminal block	5-conductor connector
Materials	Sensors ; Case: ABS resin, Amplifier Units ; Case: ABS resin,	Case: Stainless steel (SUS303) Sensing surface: PBT resin, polyurethane, glass epoxy resin
Accessories	Sensors ; Mounting Brackets, Screw Amplifier Units ; Instruction manual	Instruction manual

Operation ratings

Product discontinuation E4DA-LS7 / E4DA-WL1C	Recommended replacement E4PA-LS50-M1-N
Sensing Range 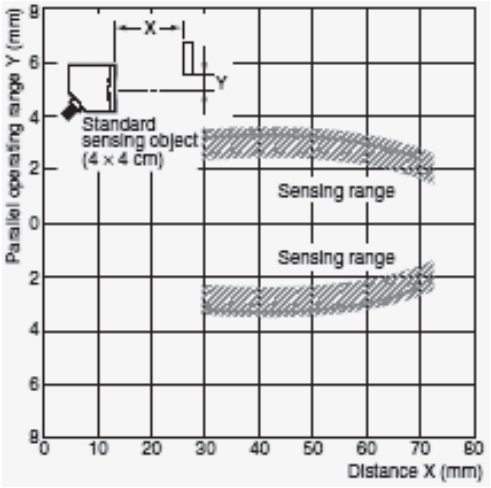 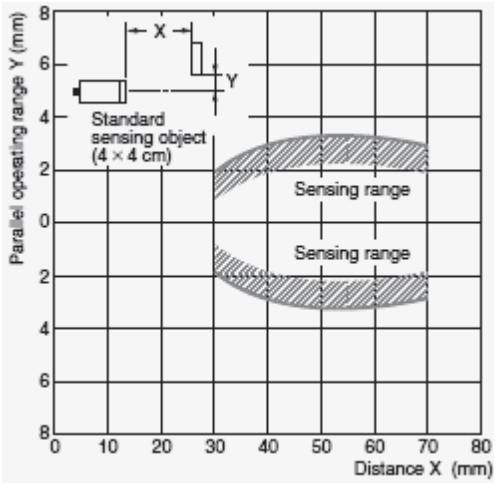 	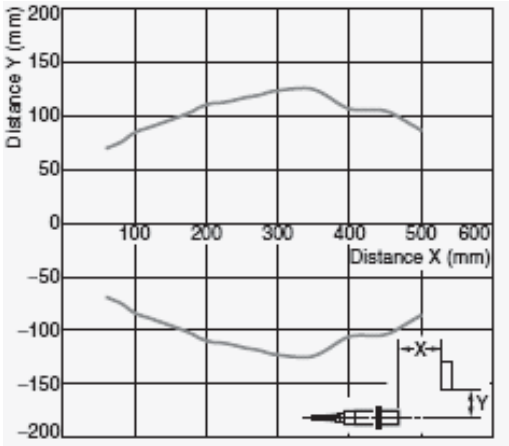

Product discontinuation
E4DA-LS7 / E4DA-WL1C

Judgement Output Setting Method and Output Characteristics

The E4DA is equipped with a function that judges and outputs the distance from the Sensor to the sensing object.

- Use the HIGH output setting adjuster and LOW output setting adjuster to set the distance range in which the three outputs HIGH, PASS, and LOW turn ON.
- An indicator is provided for each adjuster, which can be used as a guideline for the distance setting.

Considerations

(1) The indicator scale is provided as a guide. For fine tuning, connect the K3NX and view the display while performing adjustment.
(2) Set so that the HIGH setting is always greater than the LOW setting. Even when one adjuster is not used, make sure that the other adjuster satisfies these conditions.
(3) The output will become unstable and collision with the Sensor may occur if the sensing object approaches the alarm area. Reposition the sensing object if the alarm turns ON.
(4) When measurement timing is required, connect a Sync Sensor between the 0 V and sync input terminals. (For details, refer to page 436.)
(5) Correct measurement is not possible if the inclination of the sensing object exceeds the allowable angle. (For details, refer to page 435.)

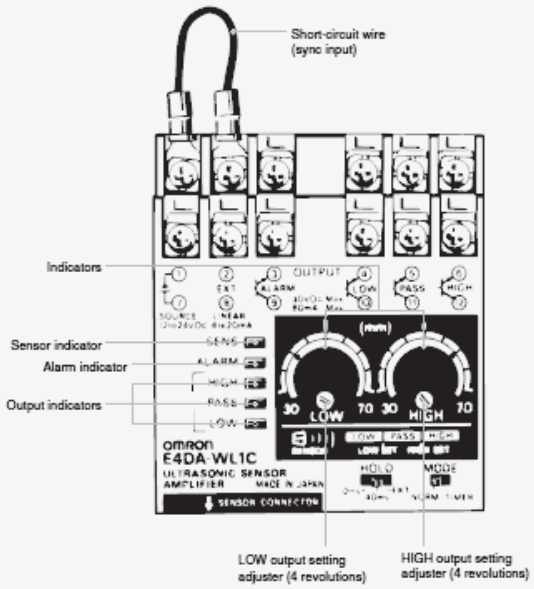

Example

The output example for linear output and judgement output when approaching the sensing object is shown here. The judgement output is set with LOW output of 40 mm and HIGH output of 60 mm. The output status at that time is shown together with the indicator status. The linear output outputs current proportional to the distance to the sensing object, regardless of the judgement output setting.

In this example, terminals (1) and (2) are shorted, and the hold function and OFF delay timer are not used.

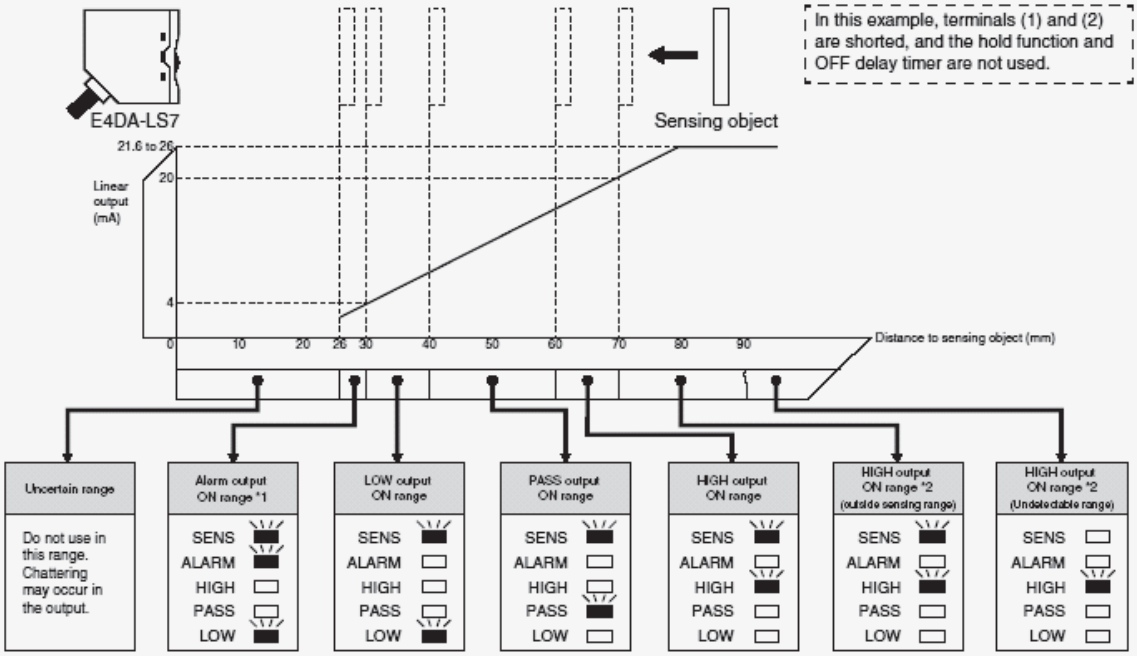

*1. Warning indicating that workpiece is outside the sensing range. Move the sensing object to the correct position.
*2. Even if the workpiece is outside the sensing range, the HIGH output will be retained.

Operation methods

Recommended replacement
E4PA-LS50-M1-N

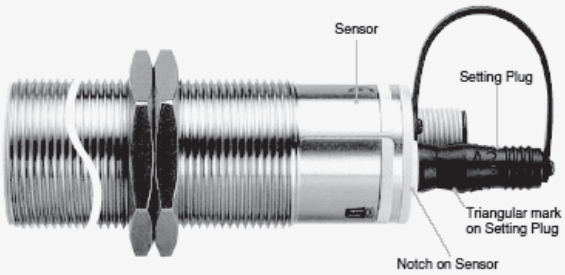

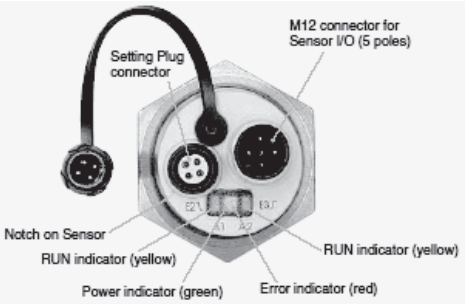

Setting Plug

The E4PA-N is set up by aligning the notch on the Sensor with one of the triangular marks on the Setting Plug and inserting the Setting Plug into the Sensor.

Position	Function
A1	Nearest sensing point A1
A2	Farthest sensing point A2
E2/E3 *1	Analog output characteristics
	1. Increase: As the distance increases, the output increases. (LED A1 flash.)
	2. Decrease: As the distance increases, the output decreases. (LED A2 flash.)
	3. Output from 0 mm: Increases from the sensing surface to point A2. (LED A1 and A2 flash.) *2
T	Temperature compensation setting (normal operating condition)

*1. Analog Output Characteristics when Setting Plug is inserted at E2/E3 Position:
The analog output characteristics will change from (1) to (2) to (3), in that order, each time the Setting Plug is inserted with the E2/E3 position aligned with the notch on the Sensor.
*2. The analog output value can be compensated so that the sensing surface (0 mm) of the Sensor is 4 mA/0 V regardless of the nearest sensing point setting.
This function is useful when using Controllers without a scaling function. Sensing is not possible, however, for characteristics within the dead band distance and current/voltage output values may not be stable.

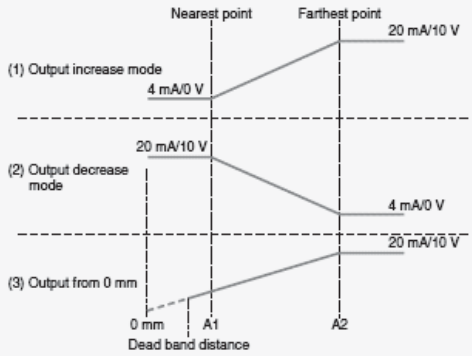

Indicator Display and Analog Output Characteristics

Status		Setting Plug position	Power indicator (green)	Error indicator (red)	RUN indicator A1 (yellow)	RUN indicator A2 (yellow)	Analog output
Normal operation	Temperature compensation	T	Lit	Not lit	Lit/Not lit *1	Lit/Not lit *1	Present value
	Setting Plug not inserted		Not lit	Lit	Lit/Not lit *1	Lit/Not lit *1	Present value
	Malfunction sensing (when detecting external disturbance)		Not lit	Flashing	Lit/Not lit *2	Lit/Not lit *2	No change or unstable
Sensing distance A1 setting	With sensing object	A1	Flashing	Not lit	Flashing	Not lit	No change
	Without sensing object		Not lit	Flashing	Flashing	Not lit	No change
Sensing distance A2 setting	With sensing object	A2	Flashing	Not lit	Not lit	Flashing	No change
	Without sensing object		Not lit	Flashing	Not lit	Flashing	No change
Analog output characteristics setting	(1) Output increase mode	E2/E3	Lit	Not lit	Flashing	Not lit	No change
	(2) Output decrease mode		Lit	Not lit	Not lit	Flashing	No change
	(3) Output from 0 mm		Lit	Not lit	Flashing (synchronous)	Flashing (synchronous)	No change
Power turned ON		None	Flashing	Not lit	Previous status	Previous status	No change

*1. Lit: The sensing object is within the sensing range.
Not lit: The sensing object is not within the sensing range.
*2. Output indicator just prior to occurrence of malfunction.